A

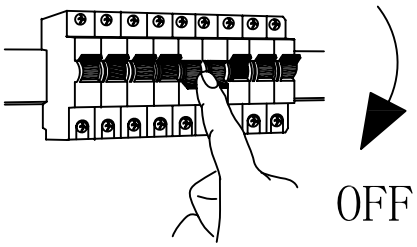

B

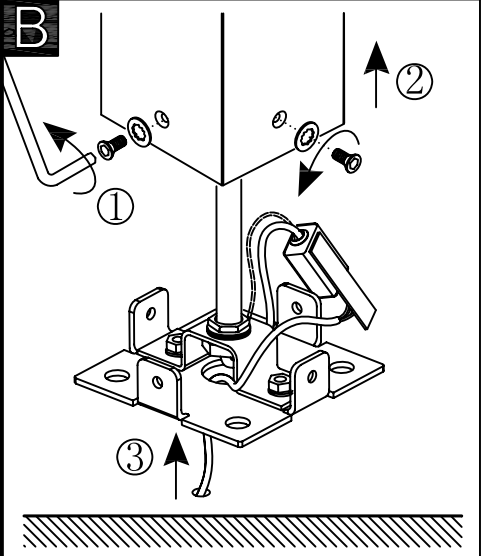

C

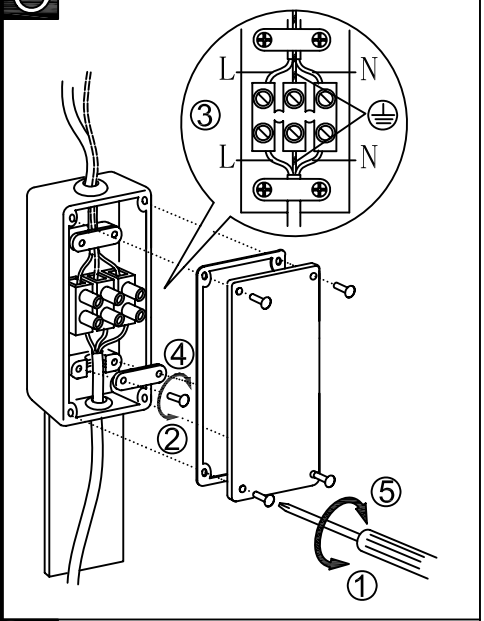

D

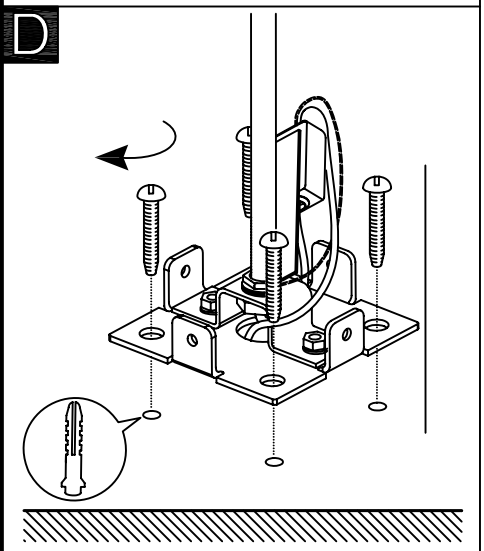

E

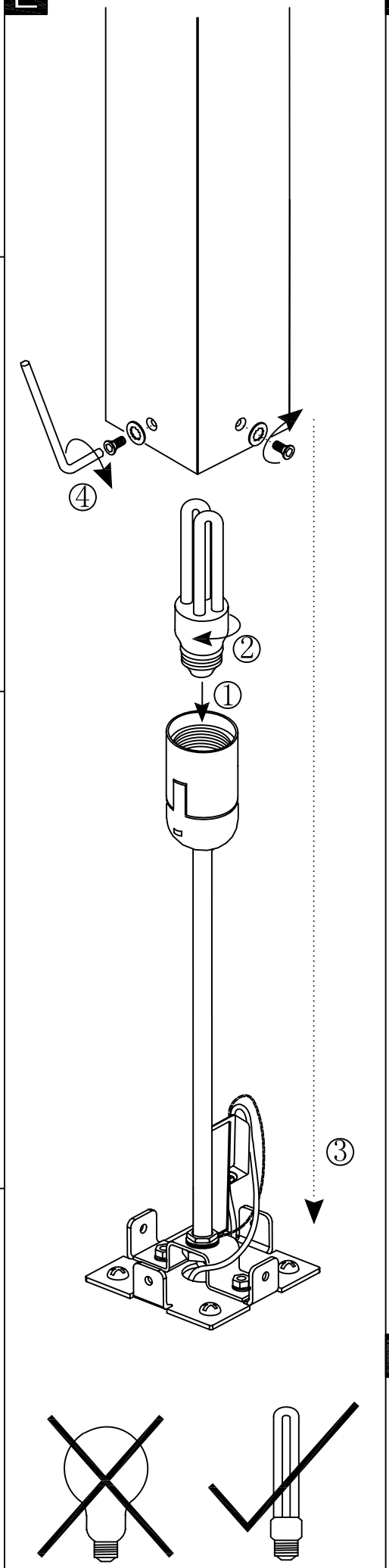

F

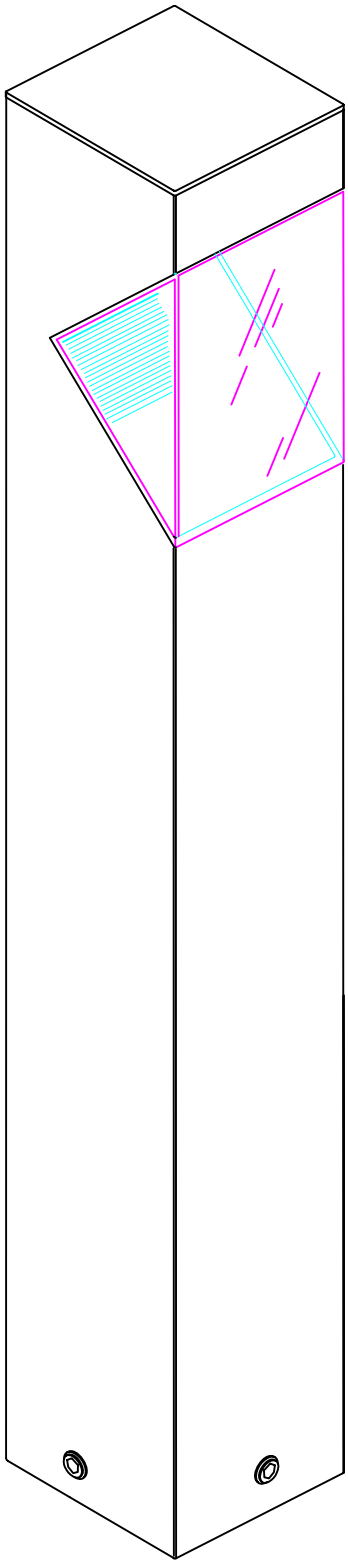

BLA87288
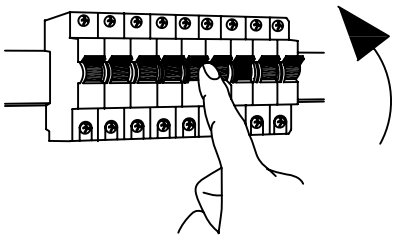
G